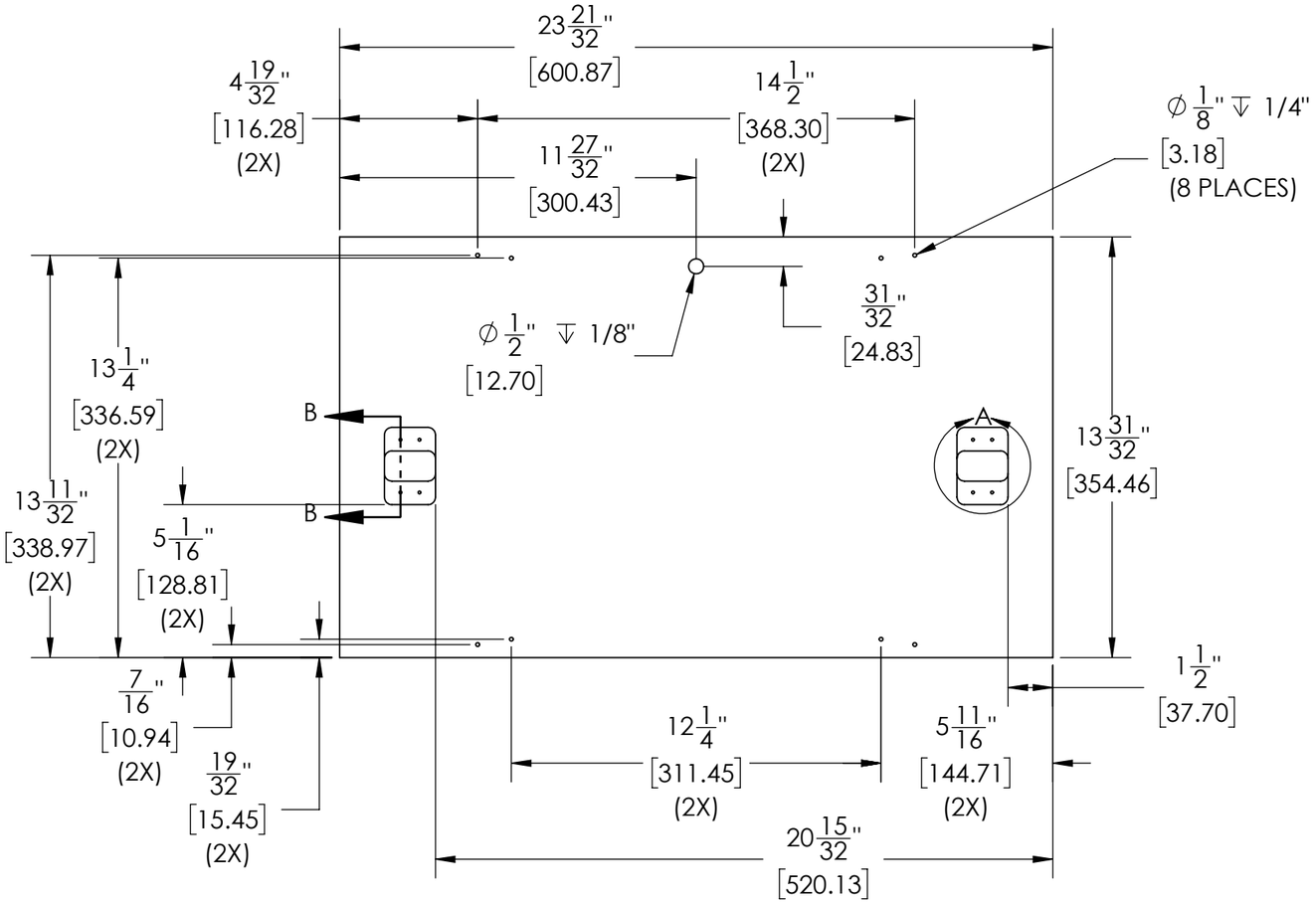

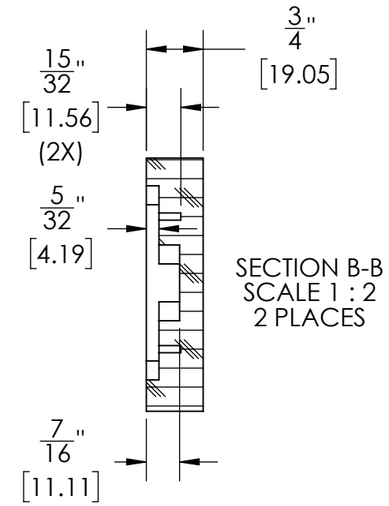

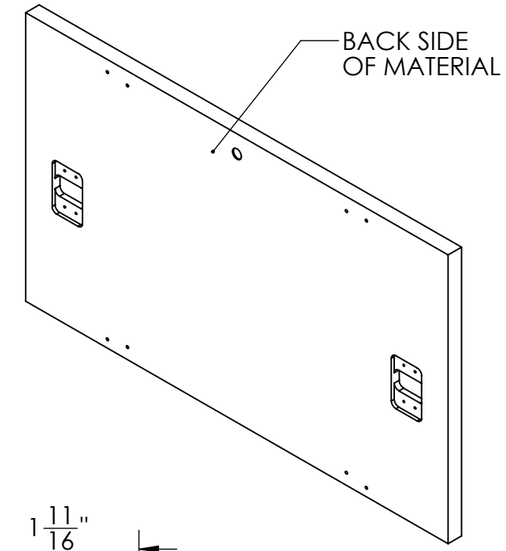

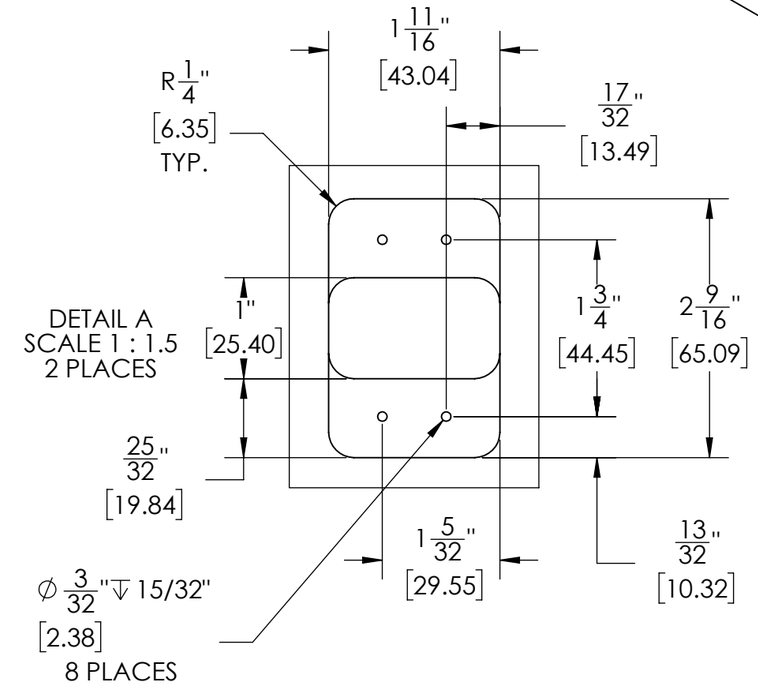

NOTE:
1/2" DIAMETER HOLE IS A REFERENCE FEATURE TO INDICATE THE TOP EDGE OF THE DRAWER OVERLAY.
ALL HANDLES SHOULD BE MOUNTED TOWARDS THIS SIDE OF THE OVERLAY.

REVISIONS

REV	ECO	DESCRIPTION	DESIGNER	DATE	APPROVED BY
A	2026-6984	NEW RELEASE	kyle.shimel	03/31/2026	kyle.shimel

PART NUMBER: 1056274

DRAWING NUMBER: 1056274

DESCRIPTION: OVERLAY, TEMPLATE, PANEL READY, DRAWER, ADA HT, UC, GEN5

GAUGE: ga | WEIGHT: 4.962 LBS | OVERALL DIMENSIONS: L X W X H | REQ QUAL MFG: NO

MATERIAL: WOOD OR SOLID SURFACES

REFERENCE:

SCALE: 1:8

SHEET 1 OF 2

UNLESS OTHERWISE SPECIFIED:
DIMENSIONS ARE IN INCHES TOLERANCES:
.X = ±0.1 Ang = ±0.5
.XX = ±0.03 Frac = ±1/64
.XXX = ±0.015
BREAK SHARP EDGES - .015 X 45°
RADIUS SHARP FILLETS - .015 TO .031

HOLES: Ø.0135 THRU Ø.125: ±.004
Ø.1260 THRU Ø.250: ±.005
Ø.2510 THRU Ø.500: ±.006
Ø.5010 THRU Ø.750: ±.008
Ø.7510 THRU Ø1.000: ±.010
Ø1.001 & UP: ±.012

Perlick Corporation **Milwaukee, Wisconsin**

THIS DOCUMENT / PUBLICATION / SOFTWARE / DRAWING CONTAINS PROPRIETARY INFORMATION WHICH IS THE PROPERTY OF THE PERLICK CORPORATION. IT MAY NOT BE REPRODUCED OR TRANSMITTED IN ANY FORM, ELECTRONIC OR MECHANICAL, INCLUDING PHOTOCOPYING, RECORDING, OR USED IN ANY INFORMATION STORAGE, TRANSMISSION, OR RETRIEVAL SYSTEM, WITHOUT WRITTEN PERMISSION FROM THE PERLICK CORPORATION. COPYRIGHT 2015 PERLICK CORPORATION. ALL RIGHTS RESERVED.
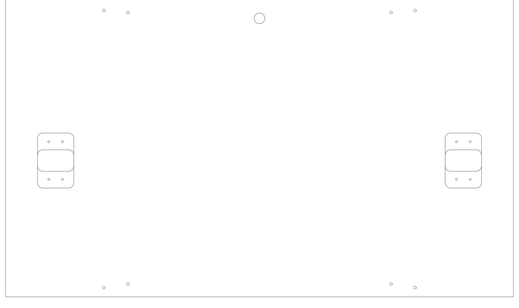
1056274
REV 'A'
1:1