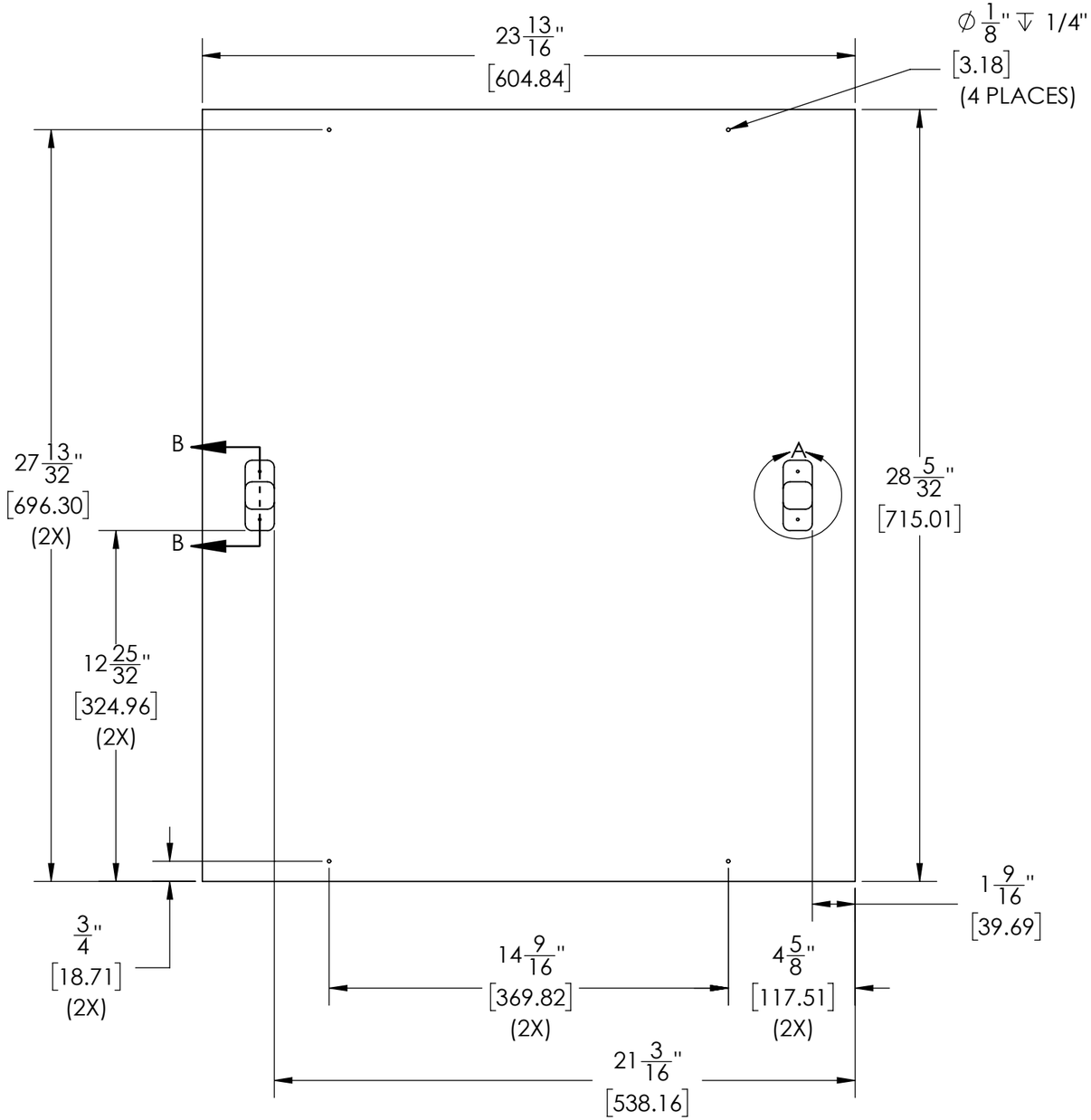

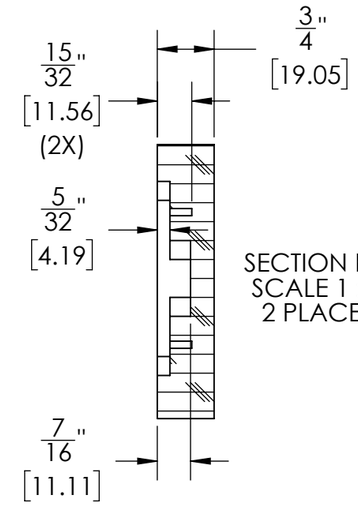

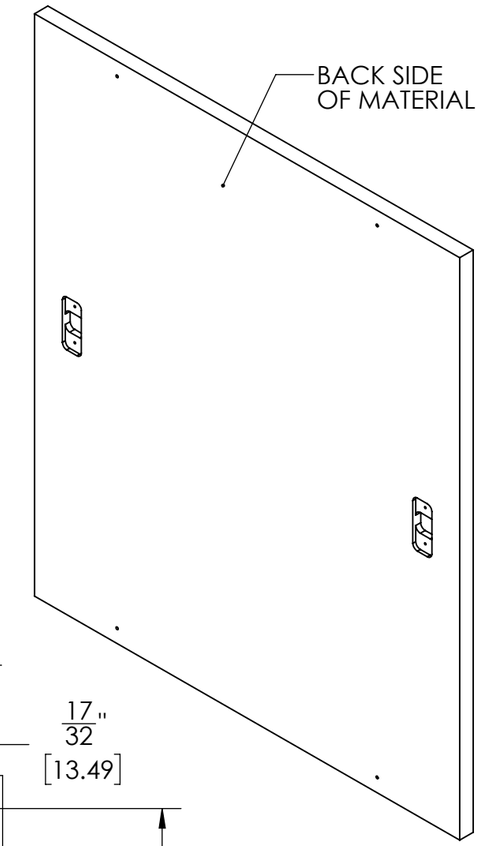

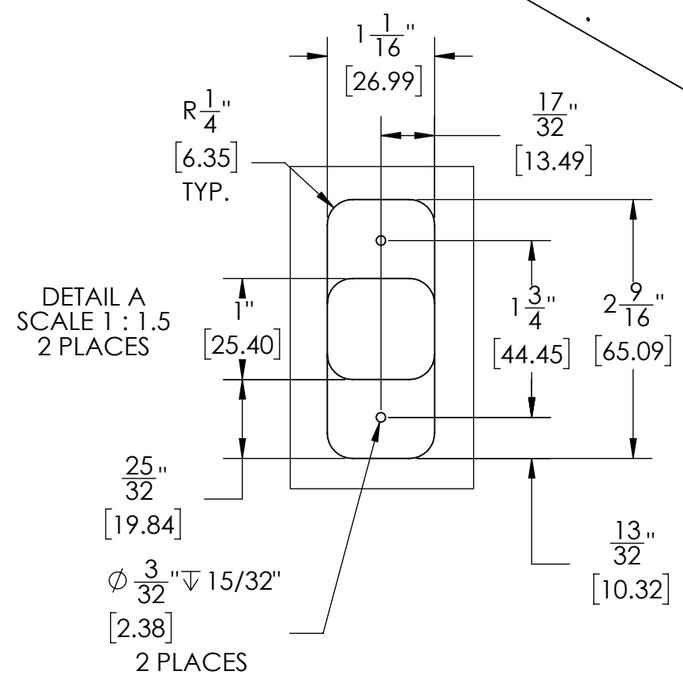

REVISIONS					
REV	ECO	DESCRIPTION	DESIGNER	DATE	APPROVED BY
A	2026-6984	NEW RELEASE	kyle.shimel	03/30/2026	kyle.shimel

PART NUMBER
1056273

DRAWING NUMBER
1056273

DESCRIPTION
OVERLAY, TEMPLATE, PANEL READY, DOOR, SOLID, 24IN, ADA HT, UC, GEN5

GAUGE: ga | WEIGHT: 10.142 LBS | OVERALL DIMENSIONS: L X W X H | REQ QUAL MFG: NO

MATERIAL: WOOD OR SOLID SURFACES

REFERENCE:

SCALE: 1:8

SHEET 1 OF 2

Perlick Corporation **Milwaukee, Wisconsin**

UNLESS OTHERWISE SPECIFIED:
DIMENSIONS ARE IN INCHES TOLERANCES:
.X = ±0.1 Ang = ±0.5
.XX = ±0.03 Frac = ± 1/64
.XXX = ±0.015
BREAK SHARP EDGES - .015 X 45°
RADIUS SHARP FILLETS - .015 TO .031

HOLES: Ø.0135 THRU Ø.125: ±.004
Ø.1260 THRU Ø.250: ±.005
Ø.2510 THRU Ø.500: ±.006
Ø.5010 THRU Ø.750: ±.008
Ø.7510 THRU Ø1.000: ±.010
Ø1.001 & UP: ±.012

THIS DOCUMENT / PUBLICATION / SOFTWARE / DRAWING CONTAINS PROPRIETARY INFORMATION WHICH IS THE PROPERTY OF THE PERLICK CORPORATION. IT MAY NOT BE REPRODUCED OR TRANSMITTED IN ANY FORM, ELECTRONIC OR MECHANICAL, INCLUDING PHOTOCOPYING, RECORDING, OR USED IN ANY INFORMATION STORAGE, TRANSMISSION, OR RETRIEVAL SYSTEM, WITHOUT WRITTEN PERMISSION FROM THE PERLICK CORPORATION. COPYRIGHT 2015 PERLICK CORPORATION. ALL RIGHTS RESERVED.
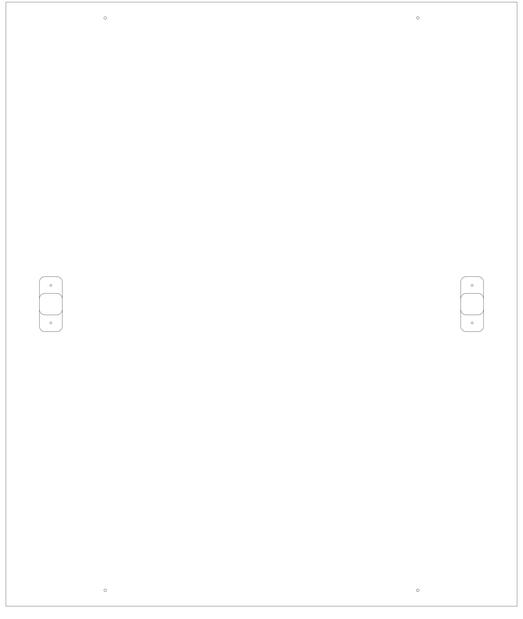
1056273
REV 'A'
1:1